Paddle Handle Toggle

Features
- **50 Amps at 12VDC**
- **Interchangable Boots (Red, Black, Yellow and Blue) Included**
- **Screw Terminals**

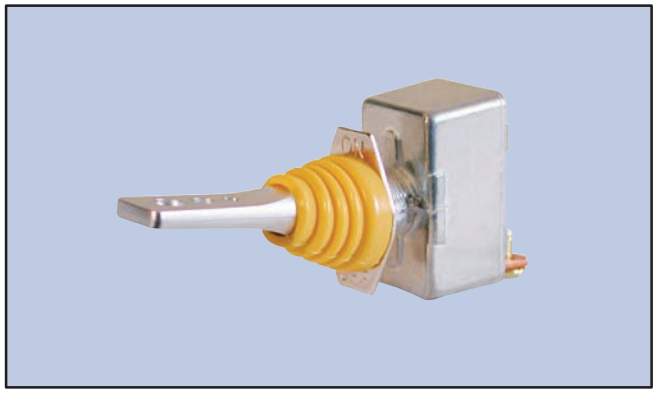

NTE Type No.	Circuitry	Action			Actuator	Diag No.
54–563	SPST	ON	NONE	OFF	Chrome Plated	S27

S27

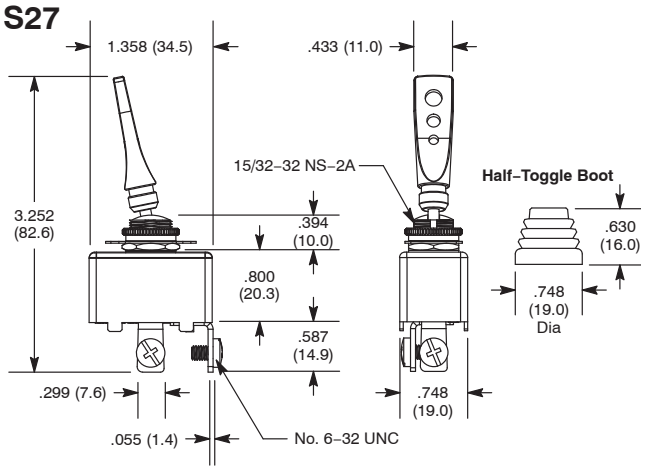

Specifications

Current Rating: 50A 12VDC
Insulation Resistance: 100 Megohms (min.) at 500VDC
Dielectric Strength: 1500V RMS (min.)
Temperature Rating: –4° to +180°F (–20° to +85°C)
Electrical Life: 25,000 cycles
Mechanical Life: 100,000 cycles
Terminal Type: Screw Type
Mounting Hole: .500 (12.7)

Long Bat Handle Toggle

Features
- **50 Amps at 12VDC**
- **1 5/8" Long Bat Handle**
- **Screw Terminals**

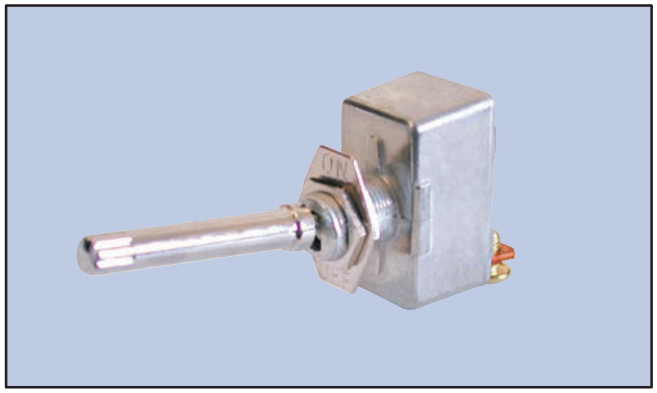

NTE Type No.	Circuitry	Action			Actuator	Diag No.
54–564	SPST	ON	NONE	OFF	Chrome Plated	S29

S29

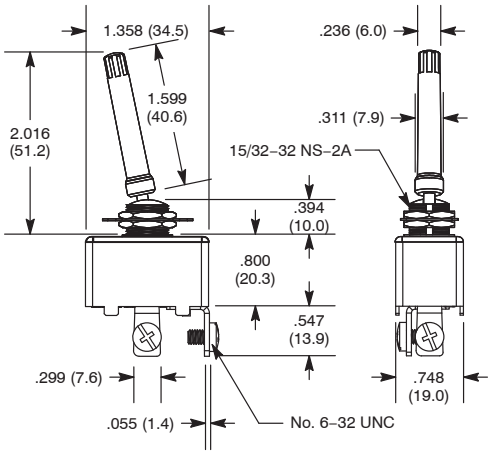

Specifications

Current Rating: 50A 12VDC
Insulation Resistance: 100 Megohms (min.) at 500VDC
Dielectric Strength: 1500V RMS (min.)
Temperature Rating: –4° to +180°F (–20° to +85°C)
Electrical Life: 25,000 cycles
Mechanical Life: 100,000 cycles
Terminal Type: Screw Type
Mounting Hole: .500 (12.7)